Code: 18HS0801 **R18**

SIDDARTHA INSTITUTE OF SCIENCE AND TECHNOLOGY: PUTTUR

(AUTONOMOUS)

B.Tech I Year II Semester Supplementary Examinations July 2021

CHEMISTRY

(Common CE, EEE & MECH)

Time: 3 hours Max. Marks: 60

PART-A

(Compulsory Questions)

1. Answer the following; (5 X 2 = 10 Marks) 2M

(a) Define effective nuclear charge. 2M

(b) What is meant by Anodic inhibitors? 2M

(c) Define hard water and soft water. 2M

(d) Define conducting polymers. 2M

(e) What is finger print region? Mention its importance. 2M

PART- B

(Answer all five units, 5 x 10 =50 Marks)

UNIT - I

2. Explain pi- molecular orbitals of benzene with neat sketch. 10M

OR

3. Describe the trends of atomic, ionic sizes of S, P, d and f block elements. 10M

UNIT – II

4. Define Entropy. Entropy changes in reversible and irreversible process. 10M

OR

5. Define corrosion ? Discuss in detail about chemical or dry corrosion. 10M

UNIT - III

6. Describe briefly boiler troubles and their treatment? 10M

OR

7. Explain with a neat sketch the various steps involved in municipal solid waste water treatment 10M

UNIT - IV

8. Briefly outline the various methods of moulding process. 10M

OR

9. (a) Define addition and Elimination reactions. 5M

(b) Explain the addition and elimination reactions with examples. 5M

UNIT - V

10. Explain the working principle of atomic absorption spectrometer and How will you determine the nickel using by AAS. 10M

OR

11. Discuss the principle, instrumentation and applications of Transmission electron microscopy 10M

Code: 18HS0851 R18

SIDDARTHA INSTITUTE OF SCIENCE AND TECHNOLOGY: PUTTUR

(AUTONOMOUS)

B.Tech I Year II Semester Supplementary Examinations July 2021

SEMICONDUCTOR PHYSICS

(Common ECE & CSE)

Time: 3 hours Max. Marks: 60

PART-A

(Compulsory Questions)

1. Answer the following; (5 X 2 = 10 Marks) 2M
   - (a) What are the merits of quantum free electron theory? 2M
   - (b) Write the applications of P-N junction. 2M
   - (c) Write the principle of solar cell. 2M
   - (d) Define population inversion? 2M
   - (e) What are the various structures of carbon nanotubes? 2M

PART- B

(Answer all five units, 5 x 10 =50 Marks)

UNIT - I

2. (a) Write brief note on origin of energy bands in solids with neat sketch? 6M
   (b) Explain the existence of allowed and forbidden bands in solids using E-K diagram 4M

OR

3. (a) Write brief note on Fermi Dirac distribution? 5M
   (b) What is the effect of temperature on Fermi Dirac distribution function? 5M

UNIT – II

4. (a) What is intrinsic semiconductor and explain the formation extrinsic semiconductors through doping? 5M
   (b) Derive the expression for intrinsic carrier concentration. 5M

OR

5. (a) Describe the Hall Effect in a semiconductors. 7M
   (b) Write the applications of Hall Effect. 3M

UNIT - III

6. (a) What are the characteristics of LEDs? 5M
   (b) Write a brief note on figure of merits and de-merits of LED's? 5M

OR

7. (a) What are the characteristics of solar cells? 6M
   (b) Explain the principle involve for working of solar cells? 4M

UNIT - IV

8. (a) Describe the construction and working principle of laser diode with the help of a neat diagram. 5M
   (b) Mention the important components of laser device. 5M

OR

9. (a) Describe optical fibre communication system. 5M
   (b) Mention the application of optical fibre in sensors. 5M

UNIT - V

10. (a) What are the techniques available for synthesizing nano materials? 5M
    (b) Explain ball milling technique for synthesis of nanomaterial? 5M

OR

11. (a) Define Condensation, Crystal growth and Calcination. 6M
    (b) Describe graphene based FET. 4M

Code: 18CS0501 R18

SIDDARTHA INSTITUTE OF SCIENCE AND TECHNOLOGY:: PUTTUR
(AUTONOMOUS)
B.Tech I Year II Semester (R18) Supplementary Examinations July/Aug 2021

PROGRAMMING FOR PROBLEM SOLVING

(CSE & ECE)

Time: 3 hours Max. Marks: 60

PART-A

(Compulsory Questions)

1. Answer the following; (5 X 2 = 10 Marks)
   - (a) What is flowchart? Give example. 2M
   - (b) Define exit and return statements. 2M
   - (c) What is multi-dimensional array? 2M
   - (d) How can you compare two strings? 2M
   - (e) What are the different file operations? 2M

PART- B

(Answer all five units, 5 x 10 =50 Marks)

UNIT - I

2. (a) Write an algorithm to find the roots of quadratic equation. 5M
   (b) Explain switch case statement with an example program. 5M

OR

3. (a) What is variable? Give the rules for variable declaration. 5M
   (b) Explain about type conversion in C. 5M

UNIT – II

4. (a) Write and explain syntax of "for" loop. 5M
   (b) Write a C program to generate 'n' Fibonacci number. 5M

OR

5. (a) List and explain loop control (or) iteration statement in C. 5M
   (b) List and explain unconditional statement in C with examples. 5M

UNIT – III

6. (a) How to declare and initialize a Three dimensional array? Discuss with examples. 5M
   (b) Write a C program to find the smallest element given in array of elements. 5M

OR

7. (a) Discuss about the different categories of functions. 5M
   (b) Write a Program to explain call-by-reference parameter passing techniques. 5M

UNIT – IV

8. (a) Explain the concept of functions returning pointers with example. 5M
   (b) Write a C program to read and print an array of elements using pointers. 5M

OR

9. (a) Explain declaration and initialization of array of strings. 5M
   (b) Write a C program to find whether a given string is palindrome or not. 5M

UNIT – V

10. (a) Define structure and write the general syntax for declaring and accessing members. 5M
    (b) How to copy and compare structure variables? Illustrate with example. 5M

OR

11. (a) Write a C program to display the content of the file in reverse order. 5M
    (b) Explain enumerated data type with example. 5M

SIDDARTHA INSTITUTE OF SCIENCE AND TECHNOLOGY:: PUTTUR
(AUTONOMOUS)
B.Tech I Year II Semester Supplementary Examinations July-2021
ENGINEERING GRAPHICS & DESIGN
(Common to CE, EEE & MECH)

Time: 3 hours Max. Marks: 60

(Answer all the Questions 5 x 12 = 60 Marks)

UNIT-I

1 Draw an ellipse having major axis is equal to 100 mm and the minor axis is equal to 70 mm. Use the concentric circle method 12M

OR

2 The vertex of a hyperbola is 60 mm from its focus. Draw the curve, if the eccentricity is 3/2. Draw a normal and a tangent at a point on the curve, 75 mm from the directrix. 12M

UNIT-II

3 A point A is 20mm above the HP and 50mm in front of the VP. Another point B is 40mm below the HP and 15mm behind the VP. The distance between the projectors of the points, measured parallel to xy, is 75mm. Draw the projections of the points. Draw lines joining their FVs and TVs 12M

OR

4 Draw the projections of a straight line AB of 70 mm long, in the following positions: a)Inclined at 30 degree to VP, in HP and one end on VP b) Inclined at 45degree to HP, one end 20 mm above HP and parallel to and 30 mm in front of VP c) Inclined at 60 degree to VP, one end 20 mm in front of VP and parallel to and 25 mm above HP 12M

UNIT-III

5 A regular hexagonal plane of 45 mm side has a corner on HP, and its surface is inclined at 450 to HP. Draw the projections, when the diagonal through the corner, which is on HP makes 300 with VP. 12M

OR

6 Draw the projections of a cone, base 30 mm diameter and axis 50 mm long , resting on HP on a point of its base circle with (a) the axis making an angle of 45^0 with HP and its top view making an angle of 30^0 with VP. 12M

UNIT-IV

7 A pentagonal pyramid with edge of base 25 mm and axis 65 mm long, its base is resting on HP. A section plane, inclined at 60 degree to HP, cuts it and perpendiculars to VP at bisect the axis. Draw the projections and obtain the true shape of the section. 12M

OR

8 A cylinder of diameter of base 40 mm and axis 55 mm long, is resting on its base on HP. It is cut by a section plane, perpendicular to VP and inclined at 45 degree to HP. The section plane is passing through the top end of an extreme generator of the cylinder. Draw the development of the lateral surface of the cut cylinder. 12M

UNIT-V

9 Draw three views of the blocks shown pictorially in figure according to first angle projection 12M

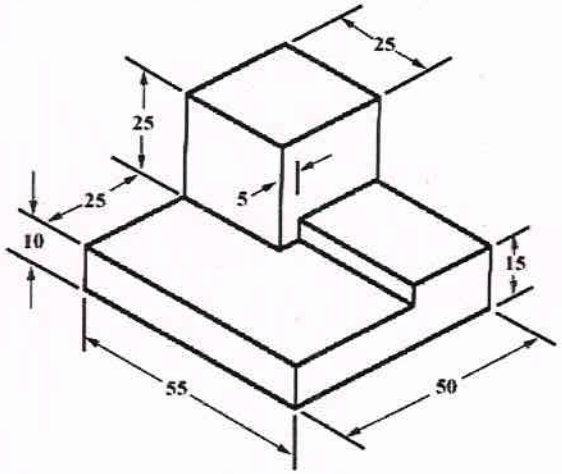

OR

10 Draw the isometric projection of the frustum of a hexagonal pyramid of base side 40 mm ,top side 25mm,and height 70mm. The frustum rests on the HP 12M

Code: 18CS0502 **R18**

SIDDARTHA INSTITUTE OF SCIENCE AND TECHNOLOGY: PUTTUR
(AUTONOMOUS)
B.Tech I Year II Semester (R18) Supplementary Examinations July/Aug 2021

DIGITAL LOGIC DESIGN

(Computer Science Engineering)

Time: 3 hours Max.Marks: 60

PART-A

(Compulsory Questions)

1. Answer the following; (5 X 2 = 10 Marks)
   - (a) What is meant by parity bit? 2M
   - (b) Explain DeMorgan's law 2M
   - (c) Construct 2:1 multiplexer? 2M
   - (d) Define Propagation Delay 2M
   - (e) Define the Static RAM and Dynamic RAM 2M

PART- B

(Answer all five units, 5 x 10 =50 Marks)

UNIT - I

2. Explain the Binary codes with examples? 10M

OR

3. (a) Design the circuit by Using NAND gates F= ABC'+ DE+ AB'D' 5M
   (b) Simplify and implementation the following SOP function using NOR gates F(A,B,C,D)– ∑m(0,1,4,5,10,11,14,15) 5M

UNIT - II

4. Reduce the expression f(x,y,z,w)= πM(0,2,7,8,9,10,11,15) .d (3,4) using K-Map? 10M

OR

5. Simplify the Boolean expression using K-MAP 10M
   F(A,B,C,D) = ∑m(1,2,3,8,9,10,11,14) +d(7,15)

UNIT - III

6. (a) Design a 4 bit adder-subtractor circuit and explain the operation in detail? 5M
   (b) Explain the functionality of a Multiplexer? 5M

OR

7. Design the combinational circuit binary to gray code? 10M

UNIT - IV

8. (a) Explain the Logic diagram of SR flip-flop? 5M
   (b) Design and draw the 3 bit up-down synchronous counter? 5M

OR

9. (a) Explain synchronous and ripple counters compare their merits and demerits? 5M
   (b) Design a 4 bit binary synchronous counters with D-flip flop? 5M

UNIT - V

10. (a) Explain about TTL family? 5M
    (b) Explain about memory decoding error detection and correction? 5M

OR

11. Construct the PROM using the conversion from BCD code to Excess-3 code? 10M

Code: 18CE0101 R18

SIDDARTHA INSTITUTE OF SCIENCE AND TECHNOLOGY: PUTTUR
(AUTONOMOUS)
B.Tech I Year II Semester (R18) Supplementary Examinations July/Aug 2021
ENGINEERING MECHANICS
(ECE)

Time: 3 hours Max.Marks: 60

PART-A
(Compulsory Questions)

1. Answer the following; (5 X 2 = 10 Marks)
   (a) Name different system of forces with suitable examples 2M
   (b) Define the following 2M
   (a) Limiting Force of Friction (b)Angle of Friction
   (c) Differentiate Centroid and Centre of Gravity and write relevant formulae 2M
   (d) Define (a) Moment of Inertia (b) Radius of Gyration 2M
   (e) Brief the method to find forces in members of truss by using method of joints. 2M

PART- B
(Answer all five units, 5 x 10 =50 Marks)
UNIT - I

2. (a) State and prove Varignon's theorem. Explain it's significance. 10M

OR

3. (a) A system of forces are acting at the corners of a rectangular block as shown in Fig.1. Determine the magnitude and direction of the resultant force. 5M

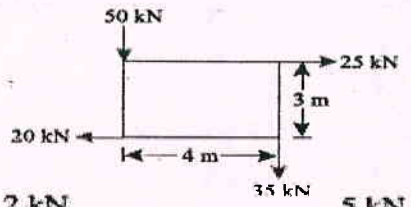

(b) 5M

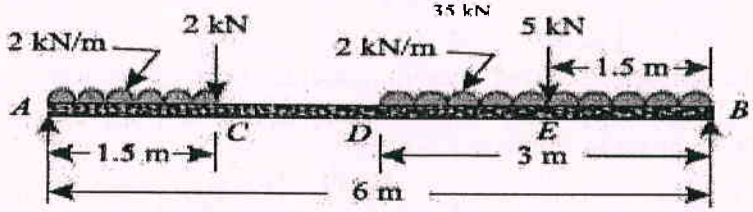

A simply supported beam AB of span 6 m is loaded as shown in Fig. above. Determine the reactions at A and B.

UNIT - II

4. A body, resting on a rough horizontal plane, required a pull of 180 N inclined at 30° to the plane just to move it. It was found that a push of 220 N inclined at 30° to the plane just moved the body. Determine the weight of the body and the coefficient of friction. 10M

OR

5. Two blocks W_1 and W_2 resting on two inclined planes are connected by a horizontal bar AB as shown in Fig.below. If W_1 is equals 1000 N, determine the maximum value of W_2 for which the equilibrium can exists. The angle of limiting friction is 20° at all rubbing faces 10M

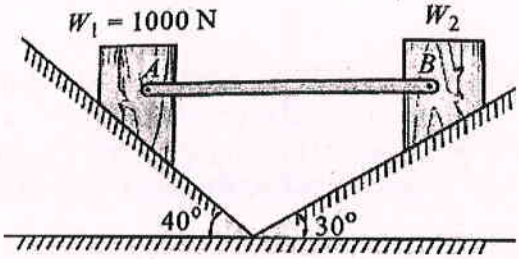

UNIT - III

6. An I-section is made up of three rectangles as shown in Fig. below Find the moment of inertia of the section about the horizontal axis passing through the centre of gravity of the section. 10M

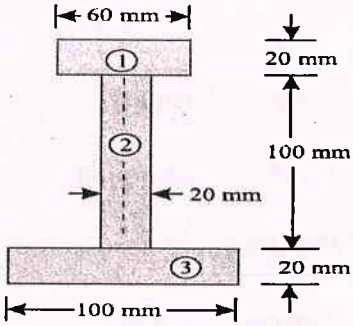

OR

7. 10M

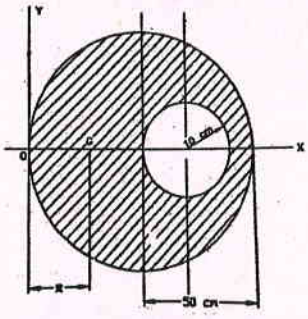

Determine the centroid of the remaining portion of a circular sheet of metal of radius 50cm when a hole of 10cm radius is taken out from the centre of the circular disc along its horizontal diameter as shown in fig. above

UNIT - IV

8. Find the moment of inertia of a T-section with flange as 150 mm × 50 mm and web as 150 mm × 50 mm about X-X and Y-Y axes through the centre of gravity of the section as shown in fig..below 10M

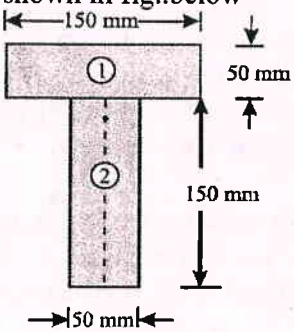

OR

9. 5M

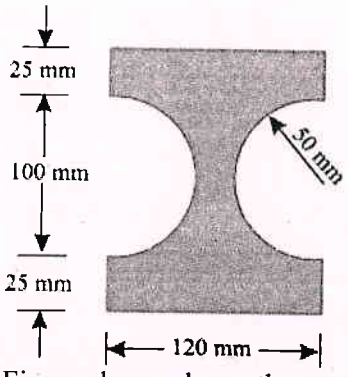

Figure above shows the cross-section of a cast iron beam. Determine the moments of inertia of the section about horizontal and vertical axes passing through the centroid of the section.

UNIT - V

10. (a) What is a cantilever truss? How will you find out its reactions? 5M
State the assumptions made in the analysis of pin jointed trusses.

(b) 5M

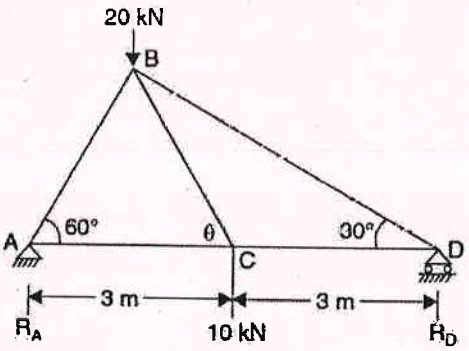

Determine the forces in all the members of the truss shown in Fig.above

OR

11. A plane is loaded & supported as shown in fig. below. Determine the nature and magnitude of the forces in the members 1,2 and 3. 10M

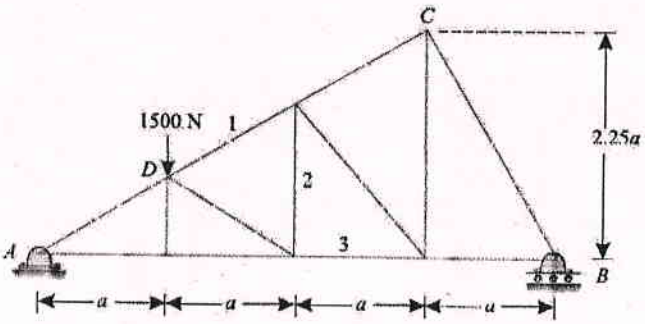

Code: 18HS0831 **R18**

SIDDARTHA INSTITUTE OF SCIENCE AND TECHNOLOGY: PUTTUR
(AUTONOMOUS)

B.Tech I Year II Semester (R18) Supplementary Examinations July 2021

MATHEMATICS - II

(Common to All)

Time: 3 hours Max.Marks: 60

PART-A

(Compulsory Questions)

1. Answer the following; (5 X 2 = 10 Marks)

(a) Find the Integrating Factor (I.F) of $x\log x\frac{dy}{dx}+y=2\log x$. 2M

(b) Find Particular Integral of $(D^2+6D+9)y=2e^{-3x}$ 2M

(c) Evaluate $\int_0^{\pi}\int_0^{\sin\theta} r\,dr\,d\theta$ 2M

(d) Show that $f(z)=z^2$ is analytic function. 2M

(e) State Cauchy's residue theorem 2M

PART- B

(Answer all five units, 5 x 10 =50 Marks)

UNIT - I

2. (a) Solve $(x+1)\frac{dy}{dx}-y=e^{3x}(x+1)^2$. 5M

(b) Solve $\frac{dy}{dx}(x^2y^3+xy)=1$ 5M

OR

3. (a) Solve $y=2px+p^n$. 5M

(b) **Solve $x^2\left(\frac{dy}{dx}\right)^2+xy\frac{dy}{dx}-6y^2=0$.** 5M

UNIT - II

4. (a) Solve $(D^3+2D^2+D)y=x^3$. 5M

(b) Solve $\frac{d^2y}{dx^2}+\frac{1}{x}\frac{dy}{dx}=\frac{12\log x}{x^2}$ 5M

OR

5. Solve in series the equation $\frac{d^2y}{dx^2}+xy=0$ 10M

UNIT - III

6. (a) Show that the area between the parabolas $y^2=4ax$ and $x^2=4ay$ is $\frac{16}{3}a^2$. 5M

(b) Evaluate the integral by transforming into polar coordinates 5M

$$\int_0^a\int_0^{\sqrt{a^2-x^2}} y\sqrt{x^2+y^2}\,dxdy.$$

OR

7. Evaluate $\int_0^1\int_0^{\sqrt{1-x^2}}\int_0^{\sqrt{1-x^2-y^2}}\frac{dxdydz}{\sqrt{1-x^2-y^2-z^2}}$. 10M

UNIT - IV

8. (a) Show that $f(z) = z + 2\bar{z}$ is not analytic anywhere in the complex plane. 5M

(b) Show that $\frac{\partial^2}{\partial x^2} + \frac{\partial^2}{\partial y^2} = 4\frac{\partial^2}{\partial z \partial \bar{z}}$. 5M

OR

9. (a) Find the bilinear transformation which maps the points $(\infty, i, 0)$ in to the points $(-1, -i, 1)$ in w-plane 5M

(b) Find the bilinear transformation that maps the point's$(1, i, -1)$ in to the points $(2, i, -2)$ in w-plane. 5M

UNIT - V

10. (a) Expand $f(z) = \sin z$ in Taylor's series about $z = \frac{\pi}{4}$ 5M

(b) Expand $f(z) = \log z$ in Taylor's series about $z = 1$ 5M

OR

11. Evaluate $\int_0^{\pi} \frac{1}{a + b\cos\theta} d\theta =, \frac{\pi}{\sqrt{a^2 - b^2}}, a > b > 0$. 10M

Code: 18EE0240 R18

SIDDARTHA INSTITUTE OF SCIENCE AND TECHNOLOGY: PUTTUR

(AUTONOMOUS)

B.Tech I Year II Semester Supplementary Examinations July/August 2021

BASIC ELECTRICAL & ELECTRONICS ENGINEERING

(CIVIL)

Time: 3 hours Max.Marks: 60

Note: for Part-A, use first 16 pages...for Part-B, use 17 page onwards

PART-A

(Answer all Three units, 3 x 10 =30 Marks)

UNIT - I

1. Define and Explain about Energy sources in detail/Explain active elements in detail. 10M

OR

2. Find the voltage to be applied across AB in order to drive a current of 5A into the circuit. 10M

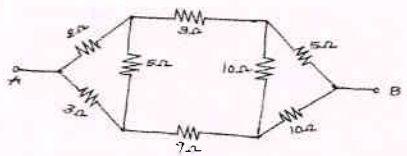

UNIT - II

3. Determine the maximum power delivered to the load in the circuit shown in fig 10M

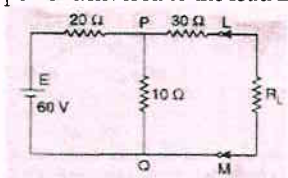

OR

4. The given ABCD parameters are A=2,B=0.9,C=1.2,D=0.5 find Y- parameters. 10M

UNIT - III

5. A 220Vshunt motor takes a total current of 80A and runs at 800 r.p.m .Shunt field resistance and armature resistance are 50Ω and 0.1Ω respectively.If iron and friction losses amount to 1600W.find(i)Copper losses(ii)Armature torque(iii)Shaft torque(iv)Efficiency. 10M

OR

6. (a) Explain principle of operation of transformer. 5M

(b) An ideal transformer has 1000turns on its primary and 500 turns on its secondary the driving voltage of primary side is 100V and the load resistance is 5 Ω,calculate V_2,$I_1$and I_2 5M

PART- B

(Answer all Three units, 3 x 10 =30 Marks)

UNIT - I

1. Draw the block diagram of series and shunt voltage regulator and explain the operation of series & shunt voltage regulator 10M

OR

2. (a) Briefly explain the operation of multiple LC filter. 5M

(b) Explain the operation of π section filter with bridge rectifier and also derive an expression for its stability factor. 5M

UNIT - II

3. Draw and explain the input and output characteristics of a transistor in CB configuration. 10M

OR

4. Derive the expression for AI, AV, Ri and Ro for CB amplifier using h-parameter model. 10M

UNIT - III

5. Explain the working of a P channel JFET and draw the V-I characteristics of it. 10M

OR

6. Describe the kind of operation that takes place in the enhancement mode MOSFET. How does this differ from depletion mode type? 10M

Code: 18EE0201 R18

SIDDARTHA INSTITUTE OF SCIENCE AND TECHNOLOGY: PUTTUR
(AUTONOMOUS)
B.Tech I Year II Semester Supplementary Examinations July/August 2021
ELECTRICAL CIRCUITS - I
(EEE)

Time: 3 hours Max.Marks: 60

PART-A
(Compulsory Questions)

1. Answer the following; (5 X 2 = 10 Marks)
   (a) Define a Self Inductance. 2M
   (b) What is admittance? 2M
   (c) What are the types of sources? 2M
   (d) What is an electric circuit? 2M
   (e) Difference between electric circuit and magnetic circuit. 2M

PART- B
(Answer all five units, 5 x 10 =50 Marks)

UNIT - I

2. For the figure shown, calculate the equivalent resistance of the following combination of resistors and also calculate the source current, total power dissipated. 10M

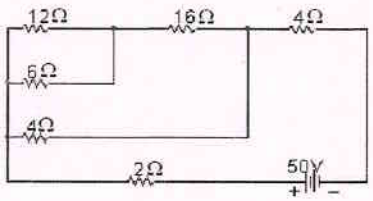

OR

3. a) Derive the expression for Delta connected resistances in terms of Star connected resistances? 5M
   b) What are the types of sources? Explain them with suitable diagrams and Characteristics? 5M

UNIT - II

4. A series circuit consisting of a 10Ω resistor, a 100μF capacitor and a 10 mH inductor is driven by a 50 Hz a.c. voltage source of maximum value 100 volts. Calculate the equivalent impedance, Current in the circuit, the power factor and power dissipated in the circuit. 10M

OR

5. A 1KΩ resistor is connected in series with an inductance of 50mH across a 230V, 50HZ AC Supply. Find (a) Inductive reactance (b) Impedance (c) Current (d) Phase angle (e) Voltage drop across resistance (f) Voltage drop across Inductance. 10M

UNIT - III

6. Find the current through 12Ω resistor using superposition theorem. 10M

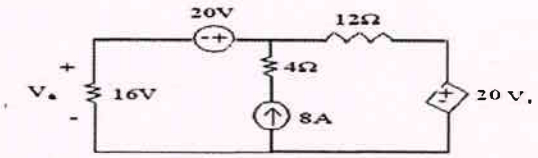

OR

7. Find the load current using Milliman's theorem. And all values are in ohms 10M

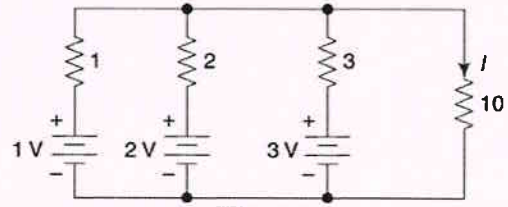

UNIT - IV

8. Show that the locus of the current in an R-L circuit with R variable is a semicircle. Find the radius and the center of the circle. 10M

OR

9. a) Draw the Locus diagram of a Series RL Circuit? 5M
   b) Draw the Locus diagram of a Series RC Circuit? 5M

UNIT - V

10. Explain Self Inductance, Mutual Inductance and Co-efficient of coupling in detail? Give the relation between L1, L2, K & M? 10M

OR

11. Derive the expression for equivalent inductance when the coupled inductors are connected in Parallel aiding and parallel opposition? 10M

Q.P. Code: 18ME0303 R18

SIDDARTHA INSTITUTE OF SCIENCE AND TECHNOLOGY:: PUTTUR
(AUTONOMOUS)
B.Tech I Year II Semester Supplementary Examinations July/Aug 2021
MATERIALS ENGINEERING
(MECHANICAL ENGNEERING)

Time: 3 hours Max. Marks: 60

PART-A
(Compulsory Questions)
Answer the following; (5 X 2 = 10 Marks)

1 a) What are cermets? 2M
b) What is cryogenic treatment? 2M
c) What are the classifications of the steels? 2M
d) What is Phase? What are different types of phase diagram? 2M
e) Give a brief note on intermediate alloy phases 2M

PART-B
(Answer all Five Units **5 x 12 = 60** Marks)

UNIT-I

2 What are the Mechanical and Technological Properties of Engineering Materials? 10M

OR

3 a) Give a brief note on intermediate alloy phases. 5M
b) Explain the Electron compound? 5M

UNIT-II

4 What are the eutectoid and eutectic reactions in Cu-Ni & Al-Cu binary phase diagram? 10M

OR

5 a) Explain the phase transformation in solid state. 5M
b) Draw an equilibrium diagram for an isomorphism system 5M

UNIT-III

6 Explain the structure and properties of Aluminum and its alloys? 10M

OR

7 a) Explain briefly on Carbon Steel. 5M
b) Write a notes on Low alloy Steel. 5M

UNIT-IV

8 a) Explain the toughness .How it is measured and explain their types? 5M
b) Explain the Hardness. How it is measured and explains their types? 5M

OR

9 What are heat treatment processes? Explain briefly 10M

UNIT-V

10 a) Enumerate the difference between the particle and Reinforced composites. 5M
b) What is ceramic material? Explain crystalline ceramics. 5M

OR

11 What is composite material? How is it classified? Give short notes. 10M

Code: 18EE0239 **R18**

SIDDARTHA INSTITUTE OF SCIENCE AND TECHNOLOGY: PUTTUR

(AUTONOMOUS)

B.Tech I Year II Semester (R18) Supplementary Examinations July/Aug 2021

BASIC ELECTRICAL ENGINEERING

(ECE & CSE)

Time: 3 hours Max.Marks: 60

PART-A

(Compulsory Questions)

1. Answer the following; (5 X 2 = 10 Marks)
   - (a) A electric kettle takes a current of 12.5A at 240V. What is the resistance of heating Element ? 2M
   - (b) Define Form Factor and Peak Factor? 2M
   - (c) What is the condition for maximum efficiency in a Transformer and expression for load current at maximum efficiency? 2M
   - (d) why single phase induction motor is not self starting? 2M
   - (e) What is Earthing? 2M

PART- B

(Answer all five units, 5 x 10 =50 Marks)

UNIT - I

2. Determine the mesh currents for the circuit shown below. 10M

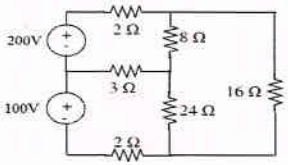

OR

3. (a) State and Explain Thevenin's Theorem 5M
   - (b) Find load current by using Thevenin's theorem for the following circuit where RL=3Ω 5M

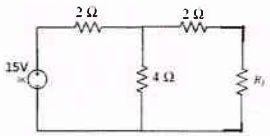

UNIT - II

4. (a) Derive the voltage and current relations in three phase balanced circuits for delta connection. 6M
   - (b) Find the rms value for the following waveform 4M

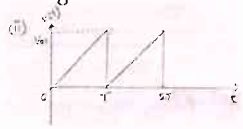

OR

5. (a) Explain the phasor relation for R, L & C elements. 4M
   - (b) A resistor of 50Ω and inductance of 100mH are connected in series across 200V, 50Hz supply. Determine the following 6M
     (i) Impedance (ii) current flowing through the circuit (iii) power factor

UNIT - III

6. (a) Write a short notes on regulation and Efficiency of the transformer. 5M
   - (b) The efficiency of a 200 KVA,1-Φ transformer is 98.7% when operating at full-load,0.8 p.f lagging, the iron loss in the transformer is 200 W. Calculate: (i)Full load copper loss (ii) Half load copper loss. 5M

OR

7. (a) Explain BH characteristics. 5M
   - (b) A 100KVA transformer has primary and secondary turns of 400 and 100 respectively. Its primary and secondary resistance and reactance are: R1=0.3Ω, R2=0.015Ω, X1=1.1Ω, X2=0.055Ω, supply voltage is 2400V.Calculate equivalent resistance and reactance on the primary side. 5M

UNIT - IV

8. Explain the construction of three phase alternator? 10M

OR

9. Sketch and explain the torque slip characteristics of 3 phase induction motor? 10M

UNIT - V

10. (a) What is the importance of wiring. 5M
    - (b) Explain how wiring system is classified. 5M

OR

11. Explain briefly about earthing and how it plays an important role in installation. 10M

Code: 18EC0444 R18

SIDDARTHA INSTITUTE OF SCIENCE AND TECHNOLOGY: PUTTUR
(AUTONOMOUS)
B.Tech II Year II Semester (R18) Supplementary Examinations July 2021

DIGITAL ELECTRONICS
(EEE)

Time: 3 hours Max. Marks: 60

PART-A
(Compulsory Questions)

1. Answer the following; (5 X 2 = 10 Marks)
   (a) Why NAND and NOR gates are called as universal gates? 2M
   (b) Give applications of multiplexers 2M
   (c) Differences between latch and Flip-flops 2M
   (d) Define Noise Margin 2M
   (e) what size of ROM required for the design of full adder 2M

PART- B
(Answer all five units, 5 x 10 =50 Marks)

UNIT - I

2. (a) Convert BCD code to 5421 and 84-2-1 code 6M
   (b) State and prove the De-Morgan's theorems 4M

OR

3. (a) What is the difference between 1's and 2's compliments? Give one example. 5M
   (b) Do the following conversions 5M
   i) $(144)_8=(\quad)_{16}$ ii) $(225.25)_8=(\quad)_{10}$

UNIT – II

4. (a) Simplify the given Boolean function using K-Map 5M
   $F(a,b,c,d)= \sum (1,3,5,7,9,11,13)$
   (b) Explain basic operation of De-multiplexer 5M

OR

5. (a) Realize full subtractor using half subtractors. 5M
   (b) Design 3x8 decoder by using basic gates 5M

UNIT – III

6. With a neat logic diagram explain basic operation oh JK-FF and T-FFs 10M

OR

7. Design MOD-10 synchronous counter using D-FFs 10M

UNIT - IV

8. (a) Define Fan in and propagation delay. 4M
   (b) Realize 2-Input NOR gate using CMOS logic 6M

OR

9. (a) Describe the operation of 3-input TTL NAND gate 5M
   (b) Differences between ECL and CMOS logic 5M

UNIT - V

10. (a) Differences between RAM and ROM 5M
    (b) Write a short note on Content addressable memories (CAM) 5M

OR

11. Describe the architecture of PAL, PLA and ROM 10M

Code: 18EC0407 **R18**

SIDDARTHA INSTITUTE OF SCIENCE AND TECHNOLOGY:
PUTTUR(AUTONOMOUS)

B.Tech II Year II Semester Supplementary Examinations July 2021

ANALOG CIRCUITS

(ECE)

Time: 3 hours Max. Marks: 60

PART-A

(Compulsory Questions)

Answer the following; (5 X 2 = 10 Marks)

1. (a) Define cutoff frequency f_α and write down its expression 2 M
   (b) State and give the significance of Barkhausen criterion foroscillation. 2 M
   (c) Explain stagger tuned amplifier 2 M
   (d) Define CMRR and give its significance. 2 M
   (e) Define Settling time of a DAC/ADC 2 M

PART- B

(Answer all five units, 5 x 10 =50 Marks)

UNIT - I

2. (a) Draw the Hybrid-pi model and explain the significance of each and every component in it. 5 M
   (b) Explain the effect of cascading on bandwidth of multistage amplifier. 5 M

OR

3. (a) With diagram, derive the expression for current gain and input resistance of Darlington amplifier 6 M
   (b) If the overall lower and higher cutoff frequencies of a two identical amplifier cascade are 600 Hz and 18 kHz respectively, compute the values of individual cutoff frequencies of both the amplifier stages. 4 M

UNIT - II

4. (a) What is the advantage of using Wein bridge oscillator and describe its working principle. Also derive the expression for frequency of oscillations. 8 M
   (b) An amplifier has voltage gain with feedback of 100. If the gain without feedback changes by 20% and the gain with feedback should not vary more than 2%, determine the value of open loop gain A and feedback ratio β. 2 M

OR

5. (a) Explain the General analysis of an LC Oscillator. 8 M
   (b) In a Colpitts oscillator, $C_1 = 0.2\ \mu F$ and $C_2 = 0.02\ \mu F$. If the frequency of oscillation is 10 kHz, find the value of inductor. 2 M

UNIT - III

6. (a) Compare the different types of tuned amplifiers. 4 M
   (b) 6 M

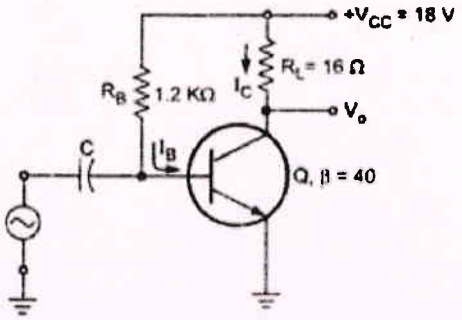

A series fed Class A amplifier shown if the Figure, operates from dc source.

The applied sinusoidal input signal generates peak base current 9mA. Calculate : (i) Quiescent current I_{CQ}. (ii) Quiescent voltage V_{CEQ}. (iii) DC input power P_{DC}, (iv) AC output power Pac and (v) Efficiency.

OR

7. Discuss Double Tuned Amplifier with neat diagram and derive the expression for its bandwidth 10M

UNIT - IV

8. (a) With neat circuit diagram, discuss instrumentation amplifier and also derive its output voltage 7 M

(b) What is sample and hold circuit? Mention the applications of sample and hold circuit. 3 M

OR

9. (a) Draw the circuit diagram of ideal and practical differentiator and obtain the expression for their voltage gain 7 M

(b) Describe the transfer characteristics of a differential amplifier. 3 M

UNIT - V

10. (a) Classify Band pass filter. Mention the important parameters of a band pass filter. Draw a Second order narrow band pass filter and derive its transfer function 6 M

(b) With suitable diagram, discuss R-2R ladder DAC 4 M

OR

11. (a) What is a notch filter? Draw the circuit schematic of a second order notch filter and obtain its transfer function 5 M

(b) Draw and explain the circuit diagram of successive approximation ADC. 5 M

Code:18HS0833 R18

SIDDARTHA INSTITUTE OF SCIENCE AND TECHNOLOGY: PUTTUR
(AUTONOMOUS)
B.Tech II Year II Semester (R18) Supplementary Examinations July 2021
PROBABILITY & STATISTICS, NUMERICAL METHODS
(ECE)

Time: 3 hours Max. Marks: 60

PART-A
(Compulsory Questions)

1. Answer the following; (5 X 2 = 10 Marks)
   (a) State the Baye's Theorem 2M
   (b) Define Binomial distribution 2M
   (c) Find the median of the following values 26, 8, 6, 12, 15, 32. 2M
   (d) Construct a forward difference table for the function $y = x^3$ for x = 0, 1, 2, 3, 4, 5. 2M
   (e) Write the diagonal five-point formula 2M

PART- B
(Answer all five units, 5 x 10 =50 Marks)

UNIT - I

2. (a) A class consists of 6 girls and 10 boys. If a committee of 3 is chosen at random from the class, find the Probability that (i)3 boys are selected (ii)exactly 2 girls are selected 5M
   (b) Three students A,B,C are in running race. A and B have the same Probability of winning and each is twice as likely to win as C. Find the Probability that B or C wins 5M

OR

3. Two dice are thrown. Let X assign to each point (a, b) in S the maximum of its numbers i.e, X (a, b) = max (a, b). Find the probability distribution. X is a random variable with X(s)={1,2,3,4,5,6}. Also find the mean and variance of the distribution. 10M

UNIT - II

4. (a) Derive mean and variance of Binomial distribution. 5M
   (b) 20% of items produced from a factory are defective. Find the probability that in a sample of 5 chosen at random (i) one is defective (ii) $p(1 < x < 4)$ 5M

OR

5. Find the mean and variance of a Normal distribution in which 7% of items are under 35and 89% are under 63. 10M

UNIT - III

6. (a) Find arithmetic mean to the following data using step deviation method 5M

Marks	10-20	20-30	30-40	40-50	50-60
frequency	5	8	25	22	10

   (b) Find the median to the following data 5M

x	5	8	11	14	17	20	23
f	2	8	12	20	10	6	3

OR

7. (a) Calculate correlation coefficient to the following data 5M

X	10	15	12	17	13	16	24	14	22	20
Y	30	42	45	46	33	34	40	35	39	38

   (b) Find two regression equations from the following data: 5M

X	10	25	34	42	37	35	36	45
Y	56	64	63	58	73	75	82	77

UNIT - IV

8. Find a positive root of $x^3 - x - 1 = 0$ correct to two decimal places by Bisection method. 10M

OR

9. from the following table values of x and yx interpolate values of y when x=0.12 and x=0.28 10M

x	0.10	0.15	0.20	0.25	0.30
y	0.1003	0.1511	0.2027	0.2553	0.3093

UNIT - V

10. Using Taylor's series method find an approximate value of y at x = 0.2 for the D.E $y^1 - 2y = 3e^x$, y (0) = 0. Compare the numerical solution obtained with exact solution 10M

OR

11. Using R-K method of 4th order find y(0.1),y(0.2) and y(0.3) given that $\frac{dy}{dx} = 1 + xy$, y(0)=2. 10M

Code: 18EE0240 R18

SIDDARTHA INSTITUTE OF SCIENCE AND TECHNOLOGY: PUTTUR
(AUTONOMOUS)

B.Tech II Year II Semester (R18) Regular Examinations July 2021

BASIC ELECTRICAL & ELECTRONICS ENGINEERING
(ME)

Time: 3 hours Max.Marks: 60

PART-A
(Answer all Three units, 3 x 10 =30 Marks)

Note: for Part-A, first 16 pages. For Part-B, from 17 page onwards

UNIT - I

1. Find the current through 12Ω resistor for the given circuit using Kirchoff's laws. 10M

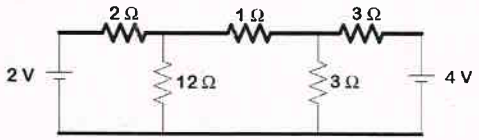

OR

2. Explain in detail about star to delta transformation of given resistive network. 10M

UNIT - II

3. Find the Short circuit parameters for the given circuit. 10M

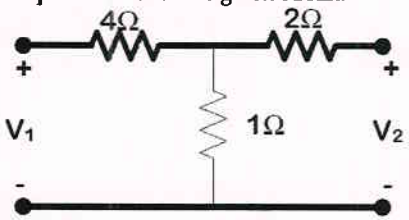

OR

4. (a) The given ABCD parameters are A=2, B=0.9, C=1.2, D=0.5. Find Yparameters. 5M
   (b) The given Y-parameters are Y11=0.5, Y12=Y21=0.6, Y22=0.9. Find the Impedance parameters. 5M

UNIT - III

5. (a) Explain about constructional details of dc motor. 5M
   (b) A 6 pole lap wound shunt motor has 500 conductors, the armature and shunt field resistances are 0.05 Ω and 25 Ω, respectively. Find the speed of the motor if it takes 120 A from dc supply of 100 V. Flux per pole is 20 mWb. 5M

OR

6. (a) Explain constructional details of transformer. 10M
   (b) A 20 kVA, 2000/200 V, 50 Hz transformer has 66 secondary turns. Calculate the number of primary turns and primary and secondary currents. Neglect losses.

PART- B
(Answer all Three units, 3 x 10 =30 Marks)

UNIT - I

1. Describe the working of a PN junction diode when it is connected in forward bias and reverse bias. Draw VI Characteristics of PN Junction Diode. 10M

OR

2. (a) With neat diagram, explain the working principle of Full Wave Rectifier. Draw its input and Output waveforms. 5M
   (b) Derive the expression for Ripple factor and Efficiency of Full Wave Rectifier. 5M

UNIT - II

3. (a) Discuss the operation of PNP transistor with diagram 5M
   (b) If the base current in a transistor is 20μA when the emitter current is 6.4mA, what are the values of α and β? Also calculate the collector current. 5M

OR

4. (a) Explain the functioning of Common Collector Configuration of BJT. State why this arrangement is also called an emitter follower circuit. 10M
   (b) Compare the characteritcs of BJT CB, CE and CC transistor configurations.

UNIT - III

5. (a) Explain about the JFET and draw the construction of JFET 5M
   (b) Explain the transfer characteristics of JFET 5M

OR

6. (a) Explain how the JFET working as a switch 5M
   (b) Write the comparision BJT and JFET. 5M

Code: 18CS0511 **R18**

SIDDARTHA INSTITUTE OF SCIENCE AND TECHNOLOGY: PUTTUR

(AUTONOMOUS)

B.Tech II Year II Semester Supplementary Examinations July/August 2021

OBJECT ORIENTED PROGRAMMING

(CSE)

Time: 3 hours Max.Marks: 60

PART-A

(Compulsory Questions)

1. Answer the following; (5 X 2 = 10 Marks)

	(a)	List some java buzzwords?	2M
	(b)	Explain about constructors?	2M
	(c)	What is an Exception? Explain types of Exception?	2M
	(d)	Define Generic?	2M
	(e)	Explain about Layout Managers?	2M

PART- B

(Answer all five units, 5 x 10 =50 Marks)

UNIT - I

2.		Explain about the Iteration Statements with an example.	10M
		OR	
3.	a)	Write a Java program to interchange the values without using third variable.	5M
	b)	Write a Java program to use Bit-wise operators.	5M

UNIT - II

4.	a)	What are the varargs in java? Write the syntax and develop any program.	5M
	b)	What is Inheritance? Explain types of inheritances.	5M
		OR	
5.		Write a java program to find the factorial value of the given number using user defined package concept.	10M

UNIT - III

6.		Write a java program to create own exception for NegetiveValueException if the user enter negetive value.	10M
		OR	
7.	a)	Write the difference between String and StringBuffer classes.	5M
	b)	Write a java program to sort the given names into ascending order.	5M

UNIT - IV

8.		Write a java program to develop Login Window using AWT.	10M
		OR	
9.	a)	What is an Applet? Explain life cycle of an applet.	5M
	b)	Write a java applet program to display Smiley Face on the Applet.	5M

UNIT - V

10.		What are the different JDBC drivers explain with syntax.	10M
		OR	
11.	a)	What are the different JDBC Drivers used to connect with database.	5M
	b)	Explain about JDBC-ODBC architecture with a neat diagram.	5M

Code: 18HS0803 **R18**

SIDDARTHA INSTITUTE OF SCIENCE AND TECHNOLOGY: PUTTUR
(AUTONOMOUS)
B.Tech II Year II Semester (R18) Supply Examinations July/Aug 2021
BIOLOGY FOR ENGINEERS
(Common to CSE & ECE)

Time: 3 hours Max.Marks: 60

PART-A
(Compulsory Questions)

1. Answer the following; (5 X 2 = 10 Marks)
   (a) Define biology? 2M
   (b) What is cell cycle? 2M
   (c) Write any four functions of proteins? 2M
   (d) What is complimentary on ? 2M
   (e) What are the two purines & Pyramidines of DNA? 2M

PART- B
(Answer all five units, 5 x 10 =50 Marks)

UNIT - I

2. Write the differences between Plant cell and Animal cell. 10M

OR

3. Describe Amminotelsim and Uricotelism. 10M

UNIT – II

4. Explain Meiosis with diagrammatic representation. 10M

OR

5. What is Mitotic Cell division? Explain Mitosis with neat diagram. 10M

UNIT – III

6. What are carbohydrates? Classify and explain mono saccharides 10M

OR

7. Define polysaccharides with suitable examples. 10M

UNIT – IV

8. Explain & Describe the R-DNA technology methods? 10M

OR

9. What are the functions & Structure of Proteins? 10M

UNIT - V

10. Give an account on energy yielding and energy consuming reactions? 10M

OR

11. Explain about classification and identification of micro organism 10M

Code: 18ME0310 R18

SIDDARTHA INSTITUTE OF SCIENCE AND TECHNOLOGY: PUTTUR
(AUTONOMOUS)
B.Tech II Year II Semester (R18) Supplementary Examinations July/Aug 2021
THEORY OF MACHINES
(ME)

Time: 3 hours Max. Marks: 60

PART-A
(Compulsory Questions)
Answer the following: (5 X 2 = 10 Marks)

1. (a) Define Co efficient of fluctuation of energy 2M
   (b) Differentiate multi disc clutch and cone clutch 2M
   (c) What is meant by Sensitiveness of governors? 2M
   (d) What are the different types of balancing machines? 2M
   (e) Distinguished the critical damping and large damping 2M

PART- B
(Answer all five units, 5 x 10 =50 Marks)

UNIT - I

2. Define coefficient of fluctuation of speed and coefficient of fluctuation of energy.(ii)The radius of gyration of a fly wheel is 1meter and fluctuation of speed is not to exceed 1% of the mean speed of the flywheel. If the mass of the flywheel is 3340kg and the steamdevelops 150KW at 135rpm, then find 1.Maximum fluctuation of energy 2. Coefficient of fluctuation of energy . 10M

OR

3. A vertical double acting steam engine has a cylinder 300mm diameter and 450mm stroke and runs at 200rpm.The reciprocating parts has a mass of 225kg and the piston rod is 50mm diameter.The connecting rod is 1.2m long. When the crank has turned 125°from IDC the steam pressure above the piston is 30KN/m2.calculate,(i)Crank-pin effort(ii)The effective turning moment on the crank shaft. 10M

UNIT - II

4. (a) Explain function of absorption type dynamometer 5M
   (b) In a vertical belt transmission dynamometer the diameter of the driving pulley rotating at 1500rpm is 80mm. The centre distance of the intermediate pulleys from the fulcrum is also 80mm each. The weighing pan on the lever is at a distance as 250mm. Find the power Transmitted when a mass of 20kg is required in the pan, including its own mass. 5M

OR

5. (a) Derive the expression for Uniform Pressure and uniform wear any one of the Bearing 5M
   (b) A cone clutch had 400mm external diameter and 200mm internal diameter it is supported by the shaft with speed of 250 rpm. Semi angle as 50° Normal intensity pressure in to the shaft and face plate surface as 0.08 N/mm².power lost in to shaft was 4kw.determine total toque in to the plate. Consider shaft rotating with uniform wear 5M

UNIT - III

6. Calculate the minimum speed of a proell governor, which has equal arms each of 200mm and are provided on the axis of rotation. The mass of each ball is 4kg and the central mass on the sleeve is 20kg.The extension arms of the lower links are each 60mm long and parallel to the axis when the minimum radius of the ball is 100mm.of load. 10M

OR

7. Explain Hartung spring controlled governor. drive their expression and how is it varies from hartnell type ? 10M

UNIT - IV

8. Derive the following expression of effects of partial balancing in two cylinder locomotive engine (i) Variation of attractive force (ii) Swaying couple (iii) Hammer blow 10M

OR

9. four cylinder vertical engine has cranks 150mm long. The plane of rotation of the first, second and fourth cranks are 400mm,200mm and 200mm respectively from that of the third crank and their reciprocating masses are 50kg,60kg and 50kg respectively. Find the mass of the reciprocating parts for the third cylinder and relative angular position of the cranks in order that the engine may be in complete balance. 10M

UNIT - V

10. (a) Deduce the expression for the free longitudinal vibration in terms of spring stiffness, its inertia effect and suspended mass. 5M
    (b) An instrument vibrates with a frequency of 1Hz when there is no damping. When the damping is provided, the frequency of damped vibration was observed to be 0.9Hz. Find, (i) damping factor (ii) logarithmic decrement. 5M

OR

11. An two degree of damped vibration system a suspended mass of 8kg makes 30 oscillations in 18 seconds. The amplitude decreases in 18 seconds. The amplitude decreases to 0.25 of the initial value after 5 oscillations. Determine (i) the spring stiffness (ii) logarithmic decrement (iii) damping factor (iv) Damping coefficient. 10M

Code: 18EC0403 **R18**

SIDDARTHA INSTITUTE OF SCIENCE AND TECHNOLOGY: PUTTUR

(AUTONOMOUS)

B.Tech II Year II Semester (R18) Supplementary Examinations July/Aug 2021

SIGNALS & SYSTEMS

(EEE)

Time: 3 hours Max. Marks: 60

PART-A

(Compulsory Questions)

1. Answer the following; (5 X 2 = 10 Marks)

(a) Define Unit impulse and Unit step Signals 2M

(b) Differentiate the Fourier series and Fourier transform 2M

(c) State the Sampling theorem 2M

(d) List the properties of cross correlation for energy signals 2M

(e) Label the Z-transform of unit step signal 2M

PART- B

(Answer all five units, 5 x 10 =50 Marks)

UNIT - I

2. (a) Infer the even and odd components of the following signals 5M

(i) $x(t)= e^{j2t}$ (ii) $x(t) =(1+t^2+t^3) \cos 210t$ (iii) $x(n)=\{-3,1, 2, -4,2\}$ (iv) $x(n)=\{5,4,3,2,1\}$

(b) Sketch the following signals 5M

(i) $2 u(t+2)- 2 u(t-3)$ (ii) $u(t+4) u(-t+4)$ (iii) $r(t)-r(t-1)-r(t-3)-r(t-4)$ (iv) $\pi(t-2)$

OR

3. (a) Identify the following systems are causal or not? 5M

(i)$y(t)=x^2(t)+x(t-4)$ (ii) $y(t)=x(t/2)$ (iii)$y(n)=x(2n)$

(b) Illustrate whether the following systems are stable or not 5M

(i) $y(t)= (t+5) u(t)$ (ii) $y(t) =(2+e^{-3t}) u(t)$ (iii) $h(n)=a^n$ for $0<n<11$

UNIT - II

4. State and prove the properties of Continuous time Fourier transform 10M

OR

5. (a) Derive the expression for Fourier transform from Fourier series 5M

(b) Find the Fourier Transform of the Signal (i) Triangular Pulse (ii) $e^{-a|t|}$ 5M

UNIT - III

6. (a) Explain the Filter characteristics of linear systems explain with neat sketches 5M

(b) Define the following (i)Impulse Response (ii)Step Response (iii) Response of the System 5M

OR

7. (a) Derive the transfer function and impulse response of an LTI system 5M

(b) Let the system function of an LTI system be $1/(j\omega+2)$. What is the output of the system for an input $(0.8)^t u(t)$? 5M

UNIT - IV

8. (a) Explain the properties of convolution 5M

(b) Derive the relation between convolution and correlation 5M

OR

9. Explain the extraction of a signal from noise by filtering. 10M

UNIT - V

10. (a) Discuss the Properties of ROC of Laplace transform 5M

(b) Find the inverse Laplace transform of the following 5M

(i)$X(s) = 1/ s(s+1) (s+2) (s+3)$ (ii) $X(s)= (3s^2+22s+27)/(s^2+3s+2)(s^2+2s+5)$

OR

11. (a) State and prove initial and final value theorems of Z-transform 5M

(b) Find the inverse Z-transform of $X(z)= z^{-1}/(3-4z^{-1}+z^{-2})$, ROC: $|z|>1$ 5M

SIDDARTHA INSTITUTE OF SCIENCE AND TECHNOLOGY: PUTTUR
(AUTONOMOUS)
B.Tech III Year II Semester Regular Examinations July/Aug 2021
Design of Machine Elements-II
(MECH)
(Design data books are permitted in the examinations.)

Time: 3 hours Max.Marks: 60

PART-A
(Compulsory Questions)

1. Answer the following; (5 X 2 = 10 Marks)

(a)	Define velocity ratio of a belt drive	L1	2M
(b)	Classify the bearings	L1	2M
(c)	List out the types of crankshafts commonly used in the engines	L1	2M
(d)	Explain the terms 'surge' in springs	L1	2M
(e)	Mention some applications of gear drives	L1	2M

PART- B
(Answer all five units, 5 x 10 =50 Marks)
UNIT - I

2. A crane hook has a section, which for the purpose of analysis is considered trapezoidal as shown in fig. it is made of plain carbon steel with an yield strength of 350Mpa in tension. Determine the load capacity of the hook for a factor of safety 3. L3 10M

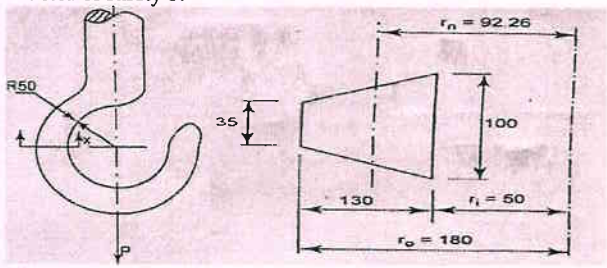

OR

3. (a) An open belt connects two flat pulleys. Pulley diameters are 300 mm and 450mm and the corresponding angles of cap are 160^0 and 210^0. the smaller pulley runs at 200rpm, μ=0.25. it is found that the belt is on the point of slipping when 3kw is transmitted. To increase the power transmitted two alternatives are suggested., namely (i) increase the initial tension by10% and (ii) increasing μ by 10% by the application of a suitable dressing to the belt. Which of these two methods would be more effective ? find the percentage increase in power possible in each case. L3 5M

(b) A fan is driven by belt from a motor running at 740rpm. A leather belt with 8mm thick, 250mm wide is used. The diametr of motor pulley and L4 5M

driven pulley are 350mm and 1370mm. the central distance is 1370mm and both pulleys are made of cast iron for which co efficiaent of friction is 0.35. allowable stress for belt is 2.4MPa. belt density is 970kg/m³ what is the power capacity of belt.

UNIT - II

4. A full journal bearing of 50 mm diameter and 100 mm long has a bearing pressure of 1.4 N/mm². The speed of the journal is 900 rpm and the ratio of journal diameter to the diametral clearance is 1000. The bearing is lubricated with oil whose absolute viscosity at the operating temperature of 75°C may be taken as 0.011 kg/m-s. The room temperature is 35°C. Find: (i) The amount of artificial cooling required. (ii) The mass of the lubricating oil required, if the difference between the outlet and inlet temperature of the oil is 10°C. Take specific heat of the oil as 1850 J/kg/°C. L3 10M

OR

5. Following data is given for 3600 hydrodynamic bearings: journal diameter =100 mm, radial clearance =0.12mm, radial load =50kN, bearing length =100 mm, journal speed =1440rpm and viscosity of lubricant = 16CP. Calculate (i) minimum film thickness (ii) coefficient of friction and (iii) power lost in friction. L3 10M

UNIT - III

6. Design a cast iron piston for a single acting four stroke engine for the following data: L3 10M
Cylinder bore = 100 mm
Stroke = 125 mm
Maximum gas pressure = 5 N/mm²
Indicated mean effective pressure = 0.75 N/mm
Mechanical efficiency = 80%
Fuel consumption = 0.15 kg per brake power per hour
Higher calorific value of fuel = 42 × 10^3 kJ/kg
Speed = 2000 rpm
Tensile stress for cast iron (σ_t) = 38 MPa. Any other data required for the design may be assumed.

OR

7. (a) Enumerate the qualities of good cylinder liners. L2 5M
(b) What is the function of piston? Explain piston troubles. L1 5M

UNIT - IV

8. A semi-elliptical laminated vehicle spring to carry a load of 6000 N is to consist of seven leaves 65 mm wide, two of the leaves extending the full length of the spring. The spring is to be 1.1 m in length and attached to the axle by two U-bolts 80 mm apart. The bolts hold the central portion of the spring so rigidly that they may be considered equivalent to a band having a width equal to the distance between the bolts. Assume a design stress L3 10M

for spring material as 350 MPa. Determine: (i) Thickness of leaves. (ii) Deflection of spring. (iii) Diameter of eye. (iv) Length of leaves. (v) Radius to which leaves should be initially bent.

OR

9.		A compression spring made of alloy steel of coil diameter 75 mm and spring index 6.0, number of active coil 20 is subjected to a load of 1.2 kN. Calculate: (i) The maximum stress developed in the coil.(ii) The deflection produced. (iii) The spring rate.	L3	10M

UNIT - V

10.	(a)	A compressor running at 300 rpm is driven by 15kW, 1200rpm motor through 20^0 full depth involute gears. The centre distance is 375mm. choose the suitable materials for the pinion and gear, design the drive.	L3	5M
	(b)	In a spur gear drive for a rock crusher, the gears are made of case hardened alloy steel. The pinion is transmitting 18 kW at 1200 rpm with a gear ratio of 3.5. The gear is to work 8 hours/day for 3 years. Design the drive.	L3	5M

OR

11.		A helical gear set used in a paper pulping machine connects the driving motor to the blade shaft. A power of 20kW is transmitted by the motor at 1600rpm while the blade shaft runs at 400rpm. Due to space restrictions the center distance between the gears is kept at 500mm. choosing suitable materials for the gears design the 20^0 full depth involute helical gears with a helix angle of 25^0.	L3	10M

Code: 18EE0207 **R18**

SIDDARTHA INSTITUTE OF SCIENCE AND TECHNOLOGY: PUTTUR
(AUTONOMOUS)

B.Tech II Year II Semester Supplementary Examinations July/August 2021

ELECTRICAL MACHINES - II

(EEE)

Time: 3 hours Max.Marks: 60

PART-A

(Compulsory Questions)

1. Answer the following; (5 X 2 = 10 Marks)

(a)	What are the possible of Three Phase Transformer Connections	2M
(b)	Define slip of induction motor?	2M
(c)	What is meant by crawling?	2M
(d)	Define load angle and phase angle	2M
(e)	What is meant by synchronous phase modifier	2M

PART- B

(Answer all five units, 5 x 10 =50 Marks)

UNIT - I

2. A three phase step down transformer is connected to 6600 volts mains and it takes 10A. Calculate the secondary line voltage, line current, and output for the following connections (i)Delta –Delta (ii) Star-Star (iii) Delta- Star (iv)Star-Delta 10M

OR

3. Explain Open delta operation of 3-phase transformers with neat sketch 10M

UNIT - II

4. Explain the production of rotating magnetic field and prove that resultant flux is equal to 1.5 times of maximum flux with phasor diagrams 10M

OR

5. Derive the expression for starting torque, maximum torque and hence obtain the value of maximum torque of a 3-phase induction motor. 10M

UNIT - III

6. Explain the procedure to construct circle diagram to find performance characteristics of three phase induction motor. 10M

OR

7. Explain the pole changing speed control method of 3-phase IM with neat diagram 10M

UNIT - IV

8. Explain the principle of operation of synchronous generator and draw its equivalent circuit. 10M

OR

9. Explain the steps involved to find Xd and Xq from Slip Test 10M

UNIT - V

10. What is meant by synchronization of alternators? Discuss any two methods of synchronization of alternator 10M

OR

11. Briefly discuss about the starting methods of synchronous motor with suitable diagrams 10M

Code: 18ME0309 **R18**

SIDDARTHA INSTITUTE OF SCIENCE AND TECHNOLOGY: PUTTUR

(AUTONOMOUS)

B.Tech II Year II Semester (R18) Supplementary Examinations July/Aug 2021

THERMODYNAMICS

(MECH)

Time: 3 hours Max. Marks: 60

PART-A

(Compulsory Questions)

1. Answer the following; (5 X 2 = 10 Marks)

	(a)	Explain the term cyclic process	2M
	(b)	Define thermal efficiency of a heat engine cycle.	2M
	(c)	What is Boltzmann constant?	2M
	(d)	What is critical state, critical pressure, and critical temperature?	2M
	(e)	What do you mean Irreversibility?	2M

PART- B

(Answer all five units, 5 x 10 =50 Marks)

UNIT - I

2.	(a)	Classify the differences between heat and work transfers?	5M
	(b)	Compare the cyclic process and non-cyclic process	5M
		OR	
3.	(a)	What is quasi static process ? Explain in detail.	5M
	(b)	Explain about Heat transfer	5M

UNIT - II

4.	(a)	Define Heat, Temperature and concept of thermal Equilibrium.	5M
	(b)	Recall short notes on concept of change in entropy.	5M
		OR	
5.	(a)	Gives an expression for entropy changes for open systems.	5M
	(b)	Explain zeroth law of thermodynamics.	5M

UNIT - III

6.	(a)	How the partial pressure in gas mixture related to mole fraction?	5M
	(b)	What is a polytrophic process?	5M
		OR	
7.		Recall a short note on a) Equation of Ideal gas b) Avogadro laws.	10M

UNIT - IV

8.		Develop an expression for air standard efficiency of dual combination cycle.	10M
		OR	
9.	(a)	Develop the expression for air standard efficiency for diesel engine.	5M
	(b)	Recall a short note on dryness fraction.	5M

UNIT - V

10.	(a)	Explain with neat sketch of super Economizer in boiler accessories.	5M
	(b)	Give the comparison between fire tube and water tube boilers.	5M
		OR	
11.		Explain with neat sketch of super heater in boiler accessories.	10M

Code: 18HS0812 **R18**

SIDDARTHA INSTITUTE OF SCIENCE AND TECHNOLOGY: PUTTUR
(AUTONOMOUS)
B.Tech II Year II Semester Supplementary Examinations July/August 2021
MANAGERIAL ECONOMICS AND FINANCIAL ANALYSIS
(ECE)

Time: 3 hours Max.Marks: 60

PART-A
(Compulsory Questions)

1. Answer the following; (5 X 2 = 10 Marks)
   (a) What is Managerial Economics? 2M
   (b) Define the law of demand 2M
   (c) What is market? 2M
   (d) Write a short notes of working capital 2M
   (e) What are the types of accounts 2M

PART- B
(Answer all five units, 5 x 10 =50 Marks)

UNIT - I

2. What is Demand and what are factors governing of demand. 10M

OR

3. What is Elasticity of demand and its types of Elasticity of Demand 10M

UNIT - II

4. Define Break-even point with graph and state the assumptions. 10M

OR

5. Define economics of scales and diseconomies of scales 10M

UNIT - III

6. What are different methods of pricing followed by companies? 10M

OR

7. What is meant by economic liberalization, economic privatization and globalization 10M

UNIT - IV

8. The cost of a project is Rs.50,000 which has an expected life of 5 years. The cash inflows for next 5 years are Rs.24,000; Rs.26,000; Rs.20,000; Rs.17000 and Rs.16,000 respectively. Determine the Payback period. 10M

OR

9. What is meant by working capital and working capital cycle? 10M

UNIT - V

10. a) Write short notes on Inventory turnover ratio 5M
    b) A firm sold good worth Rs.5,00,000 and its gross profit is 20% of sales value. The inventory at the beginning of the year was Rs. 16,000 and at the end of the year were 14,000. Compute inventory turnover ratio and the inventory holding period 5M

OR

11. a) Write about various types of accounts and their rules governing each account. 5M
    b) Mention the advantages of double-entry book-keeping. 5M

Code: 18EC0408 R18

SIDDARTHA INSTITUTE OF SCIENCE AND TECHNOLOGY: PUTTUR

(AUTONOMOUS)

B.Tech II Year II Semester (R18) Supplementary Examinations July 2021

ANALOG COMMUNICATIONS

(ECE)

Time: 3 hours Max. Marks: 60

PART-A

(Compulsory Questions)

1. Answer the following; (5 X 2 = 10 Marks)

	(a)	Explain different types of modulation?	2M
	(b)	Differentiate between Phase Modulation and Frequency Modulation.	2M
	(c)	Classify types of noise.	2M
	(d)	Define Pulse amplitude modulation.	2M
	(e)	Define Fidelity.	2M

PART- B

(Answer all five units, 5 x 10 =50 Marks)

UNIT - I

2.	(a)	Why VSB Modulation is used, identify the merits and applications.	6M
	(b)	Develop total transmitted power equation.	4M
		OR	
3.	(a)	With relevant expressions and waveforms, summarize the generation of AM wave using Switching Modulator.	6M
	(b)	List out the advantages of AM wave.	4M

UNIT - II

4.	(a)	Mention the properties of FM.	5M
	(b)	Give Comparison of FM and AM, PM and FM.	5M
		OR	
5.	(a)	Give Comparison of FM and AM, PM and FM.	5M
	(b)	Compare Wide Band FM and Narrow Band FM	5M

UNIT - III

6.	(a)	Explain External noise in detail.	6M
	(b)	Summarize Thermal Noise/ Johnson's noise.	4M
		OR	
7.	(a)	Analyse time domain description of SSB wave.	5M
	(b)	Generate DSB modulation, with the help of block diagram.	5M

UNIT - IV

8.	(a)	Classify Pulse Modulation.	5M
	(b)	Elaborate modulation and demodulation technique for PPM with neat diagrams?	5M
		OR	
9.	(a)	With a help of block diagram explain Frequency Division Multiplexing.	5M
	(b)	With a help of block diagram explain Time Division Multiplexing.	5M

UNIT - V

10.	(a)	Explain Sensitivity, Selectivity, and Fidelity.	5M
	(b)	Brief Entropy with necessary equations.	5M
		OR	
11.	(a)	Draw the block diagram of Super-heterodyne AM receiver.	6M
	(b)	Explain Shannon coding, with an example.	4M

Code: 18EE0206 **R18**

SIDDARTHA INSTITUTE OF SCIENCE AND TECHNOLOGY: PUTTUR

(AUTONOMOUS)

B.Tech II Year II Semester Supplementary Examinations July 2021

POWER ELECTRONICS

(EEE)

Time: 3 hours Max. Marks: 60

PART-A

(Compulsory Questions)

1. Answer the following; (5 X 2 = 10 Marks) 2M

(a) Define Latching current and holding current 2M

(b) Explain Peak inverse voltage of Thyristor 2M

(c) What is meant by step-down chopper? 2M

(d) What is meant by PWM control? 2M

(e) Explain modulation index 2M

PART- B

(Answer all five units, 5 x 10 =50 Marks)

UNIT – I

2. Briefly explain about insulated gate bipolar transistor (IGBT) and it's switching characteristics. 10M

OR

3. (a) With neat block diagram explain the RC firing circuit 5M

(b) Explain V-I Characteristics Of SCR 5M

UNIT - II

4. (a) Explain the operation of Three phase fully controlled rectifier with R load 5M

(b) Derive the average and RMS load voltage for three phase fully controlled rectifier with R load. 5M

OR

5. A single phase half wave converter is operated from a 230V, 50Hz supply. If the load is Resistive of 10M
value 10 ohms and firing angle is 600 Determine
i) the rectification efficiency ii) form factor iii) ripple factor
iv) Transformer utilization factor v) Peak inverse voltage of thyristor.

UNIT - III

6. (a) What is a dc chopper? Describe various types of chopper configurations 6M

(b) Derive an expression for its average dc output voltage. 4M

OR

7. The boost converter has an input voltage of Edc=5V.the required average output voltage is E0=15V And the average load current I0=0.5A. The switching frequency is 25 kHz. If the L=150μH and C=220μF, Determine, 10M
(a) the duty cycle (b) the ripple current of inductor ΔI (c) the peak current of inductor I2, (d) The ripple voltage of filter capacitor ΔVC, (e) the critical values of Land C.

UNIT - IV

8. Explain briefly sinusoidal pulse width modulation with neat diagrams 10M

OR

9. Analyze the single-phase half bridge Voltage Source Inverter and perform steady state analysis? 10M

UNIT - V

10. A 1-Ø full bridge inverter has RLC load of R=4Ω , L=35mH and C=155μF.The dc input voltage is 230V And the output frequency is 50Hz. (a) find an expression for load current up to fifth harmonic .also Calculate (b) RMS value of fundamental load current, (c) the power absorbed by load and the fundamental power , (d) the rms and peak currents ofeach thyristor. 10M

OR

11. A 1-Ø half bridge inverter has a resistive load of R= 3Ω,and the d.c input voltage Edc=50V.calculate i)RMS output voltage at the fundamental frequency E1. (ii) the output power P0 (iii) the average and peak current of each thyristor and (iv) the peak reverse –blocking voltage of each thyristor. 10M

Code: 18EC0409 R18

SIDDARTHA INSTITUTE OF SCIENCE AND TECHNOLOGY: PUTTUR
(AUTONOMOUS)
B.Tech II Year II Semester Supplementary Examinations July 2021
Probability Theory and Stochastic Processes
(ECE)

Time: 3 hours Max. Marks: 60

PART-A
(Compulsory Questions)

1. Answer the following; (5 X 2 = 10 Marks)
   (a) How do you know two events are independent or not. 2M
   (b) Write statement of Central Limit Theorem. 2M
   (c) What is ergodic random process? 2M
   (d) Define Power spectrum. 2M
   (e) Expression to find mean value of LTI System response. 2M

PART- B
(Answer all five units, 5 x 10 =50 Marks)

UNIT - I

2. (a) Define axioms of probability. Also define probability as a relative frequency. 5M
   (b) When two dice are thrown, determine the probabilities from axiom3 for the following three events 5M
   i) A= {sum=7} ii) B= { 8< sum<11} iii) C={10<sum}

OR

3. (a) Define a Random variable? Explain about probability distribution function with properties? 5M
   (b) let X be a continuous random variable with density function 5M
   $$f_X(x) = \begin{cases} \frac{x}{9} + k, & 0 < x < 6 \\ 0, & otherwise \end{cases}$$
   i) Find the value of 'k' ii) find P(2<x<5)

UNIT - II

4. (a) Explain about Joint distribution & density function? And discuss its properties? 5M
   (b) If the joint Pdf of two dimensional random variable (x, y) is given by: 5M
   fX,Y(x,y) = kxy ; 0<x<y<1
   = 0 ; otherwise
   Find the 'k' value and marginal density function of X and Y.

OR

5. (a) Discuss about the Sum of Two Random Variables? 5M
   (b) Statistically independent random variables X and Y have densities 5M
   $f_X(x) = 5\mu(x)e^{-5x}$, $f_Y(y) = 2\mu(y)e^{-2y}$. Find the density of the sum W= X+Y

UNIT - III

6. (a) Explain about first order, second, wide-sense and strict sense stationary process. 10M

OR

7. (a) Explain about mean-ergodic process. 5M
   (b) If x (t) is a stationary random process having auto correlation function: 5M
   $R_{XX}(\tau) = 9 + 2e^{-|\tau|}$. Find the mean and variance of the random variable.

UNIT - IV

8. State and prove Wiener –Khintchins relations 10M

OR

9. (a) Discuss the properties of CPSD?. 5M
   (b) The auto correlation of a WSS random process X(t) is given by $R_{XX}(\tau) = Acos(\omega_0\tau)$ where A and ω_0 are constants. Find PSD?. 5M

UNIT - V

10. (a) Derive the relation between PSDs of input and output random process of an LTI system. 5M
    (b) Discuss about cross correlation between the input X (t) and output Y (t). 5M

OR

11. Write short notes on: (i) Band Pass random process. ii) Band limited random process (iii) Narrow band random process. 10M

Code: 18CE0110 **R18**

SIDDARTHA INSTITUTE OF SCIENCE AND TECHNOLOGY: PUTTUR

(AUTONOMOUS)

B.Tech II Year II Semester Supplementary Examinations July/August 2021

MATERAILS, TESTING & EVALUATION

(CIVIL)

Time: 3 hours Max.Marks: 60

PART-A

(Compulsory Questions)

1. Answer the following; (5 X 2 = 10 Marks)

	(a)	Write about Cast iron	2M
	(b)	List the classifications of rocks	2M
	(c)	Define Distemper	2M
	(d)	What do you mean by soundness of aggregate?	2M
	(e)	Write about light weight concrete	2M

PART- B

(Answer all five units, 5 x 10 =50 Marks)

UNIT - I

2.		Classify the bricks and explain the working of Hoffman's kin for the burning of bricks	10M
		OR	
3.	(a)	Explain various types of seasoning of Timber	5M
	(b)	What are the characteristics of good timber and its common uses in building industry?	5M

UNIT - II

4.		Write about manufacturing of ordinary cement.	10M
		OR	
5.		What are the defects in paint and explain any five of them?	10M

UNIT - III

6.		Describe briefly the classification of tar and the specifications of bitumen as a building material.	10M
		OR	
7.		Describe tests and testing of bitumen?	10M

UNIT - IV

8.		Explain in detail the slump test with the help of a neat sketch. Discuss its merits and limitations	10M
		OR	
9.		Write about mixing and vibration of concrete?	10M

UNIT - V

10.		Explain plastic deformation of metals and Tensile test?	10M
		OR	
11.		Write about strength of ceramic and internal friction of material?	10M